2005 Pontiac GTO

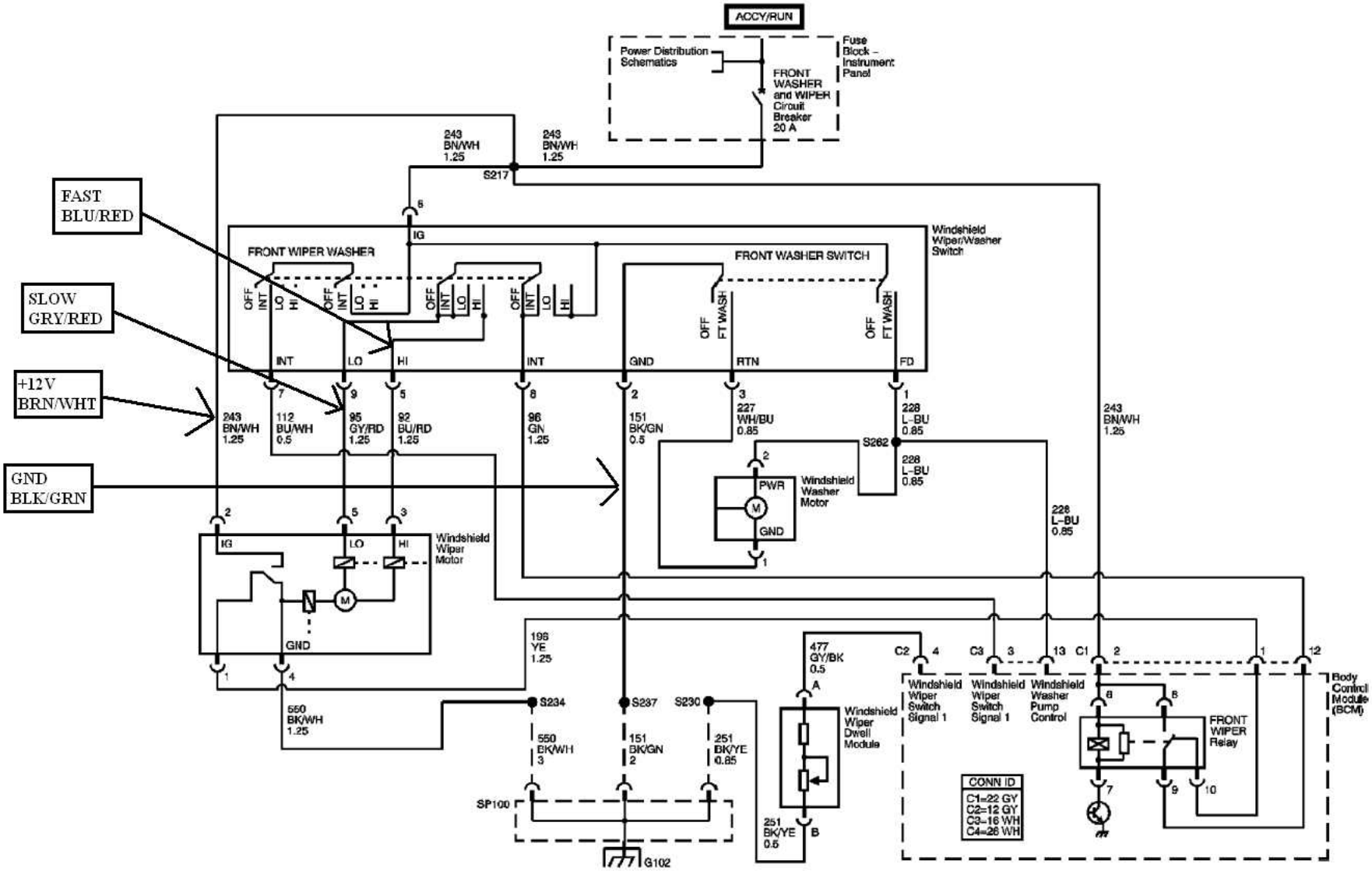

HOT SIDE SWITCHING

WIPERS RUN WHEN 12V APPLIED TO WIPER MOTOR SLOW OR FAST TERMINALS. MOTOR COMMON AT GROUND.

Wiper/Washer System Diagram

Rain Tracker™
VEHICLE INTERFACE WIRING DIAGRAM

© 2004 OPTO-ELECTRONIC DESIGN, INC