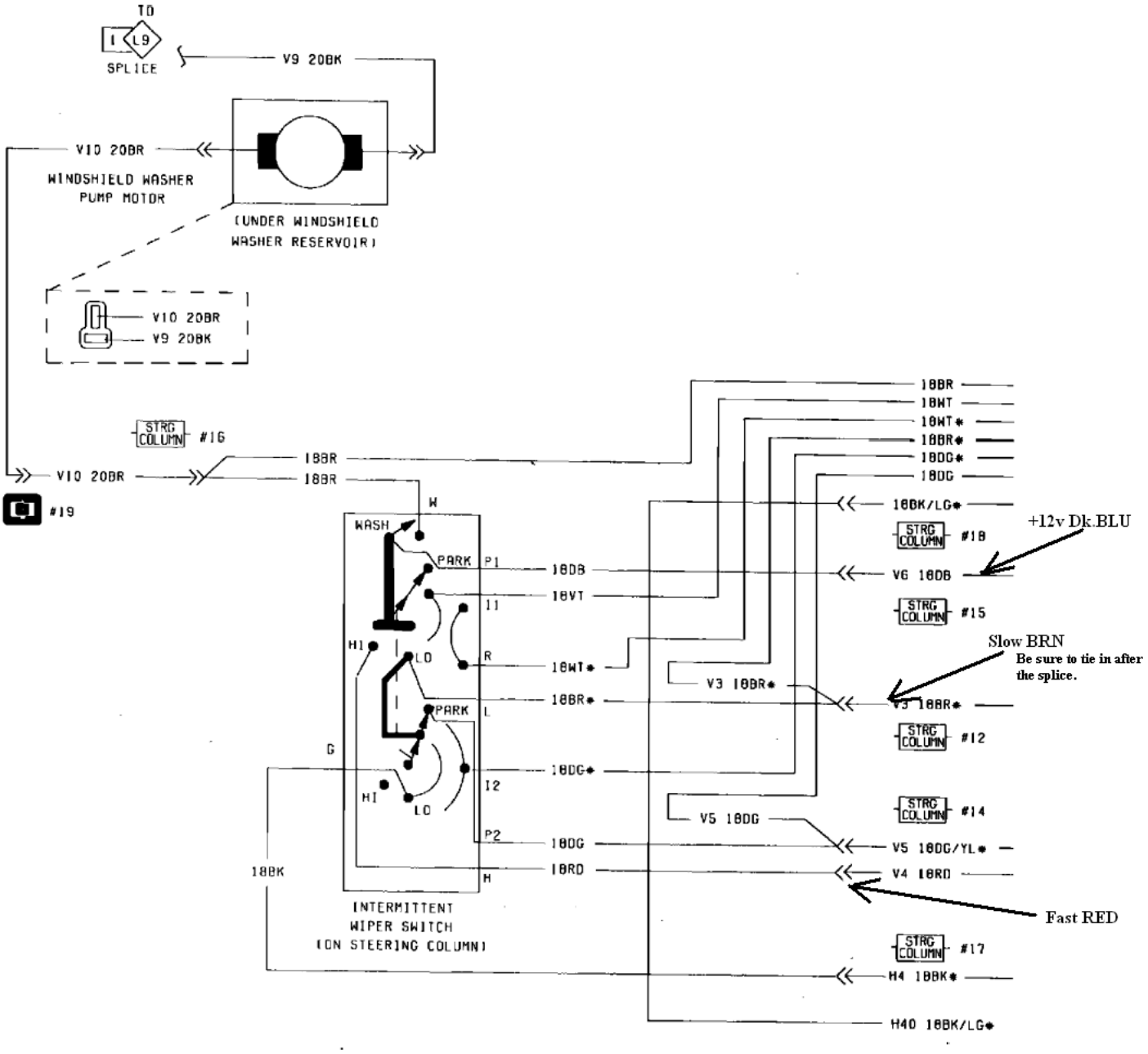

HOT SIDE SWITCHING

WIPERS RUN WHEN 12V APPLIED TO
WIPER MOTOR SLOW OR FAST TERMINALS.
MOTOR COMMON AT GROUND.

RainTracker™
VEHICLE INTERFACE
WIRING DIAGRAM

© 2004 OPTO-ELECTRONIC DESIGN, INC