Wiper/Washer Systems LHD

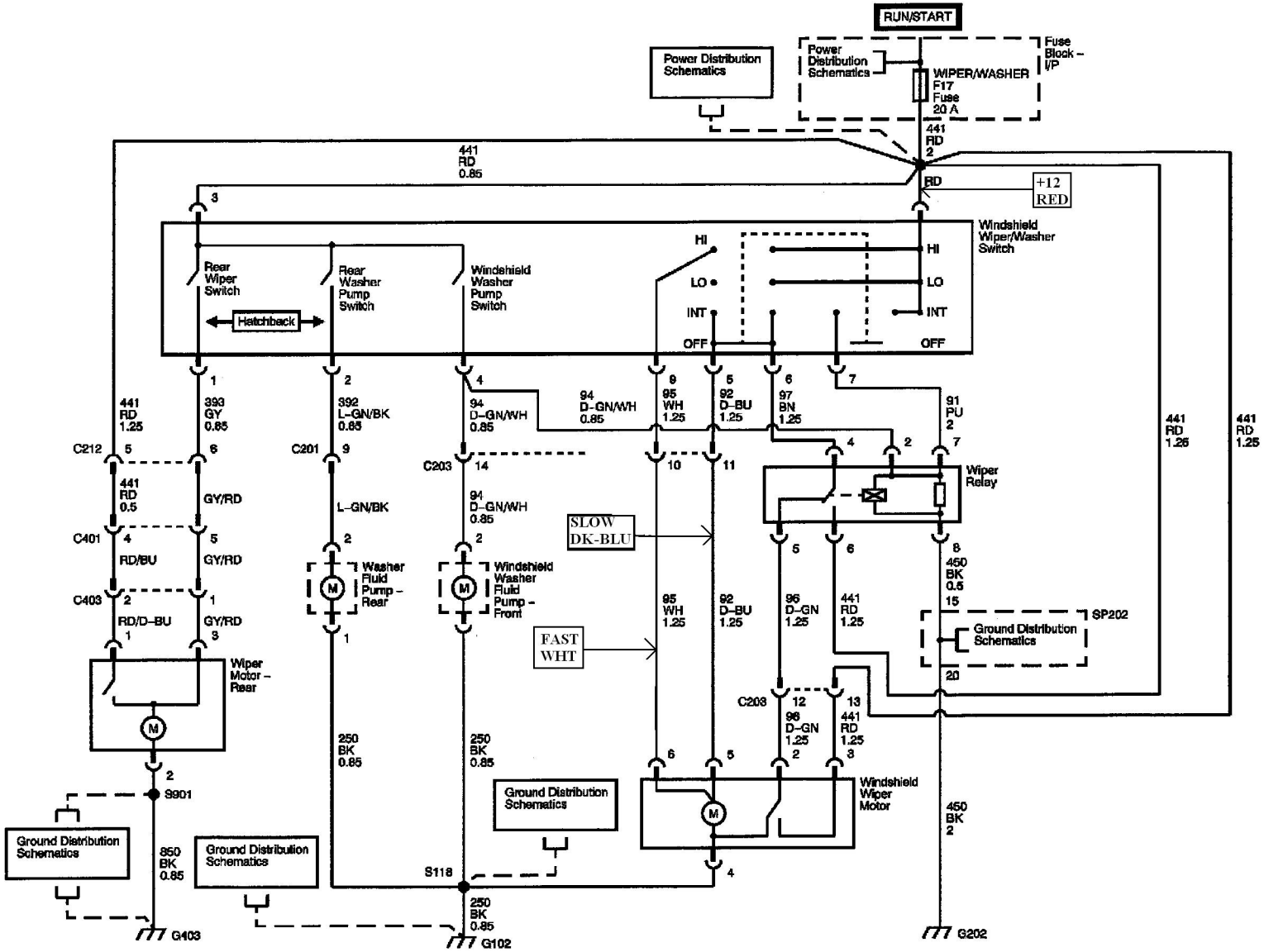

RainTracker™

VEHICLE INTERFACE WIRING DIAGRAM

2004 OPTO-ELECTRONIC DESIGN, INC

HOT SIDE SWITCHING

WIPERS RUN WHEN 12V APPLIED TO WIPER MOTOR SLOW OR FAST TERMINALS. MOTOR COMMON AT GROUND.