1999 Saab 9-5 Sedan

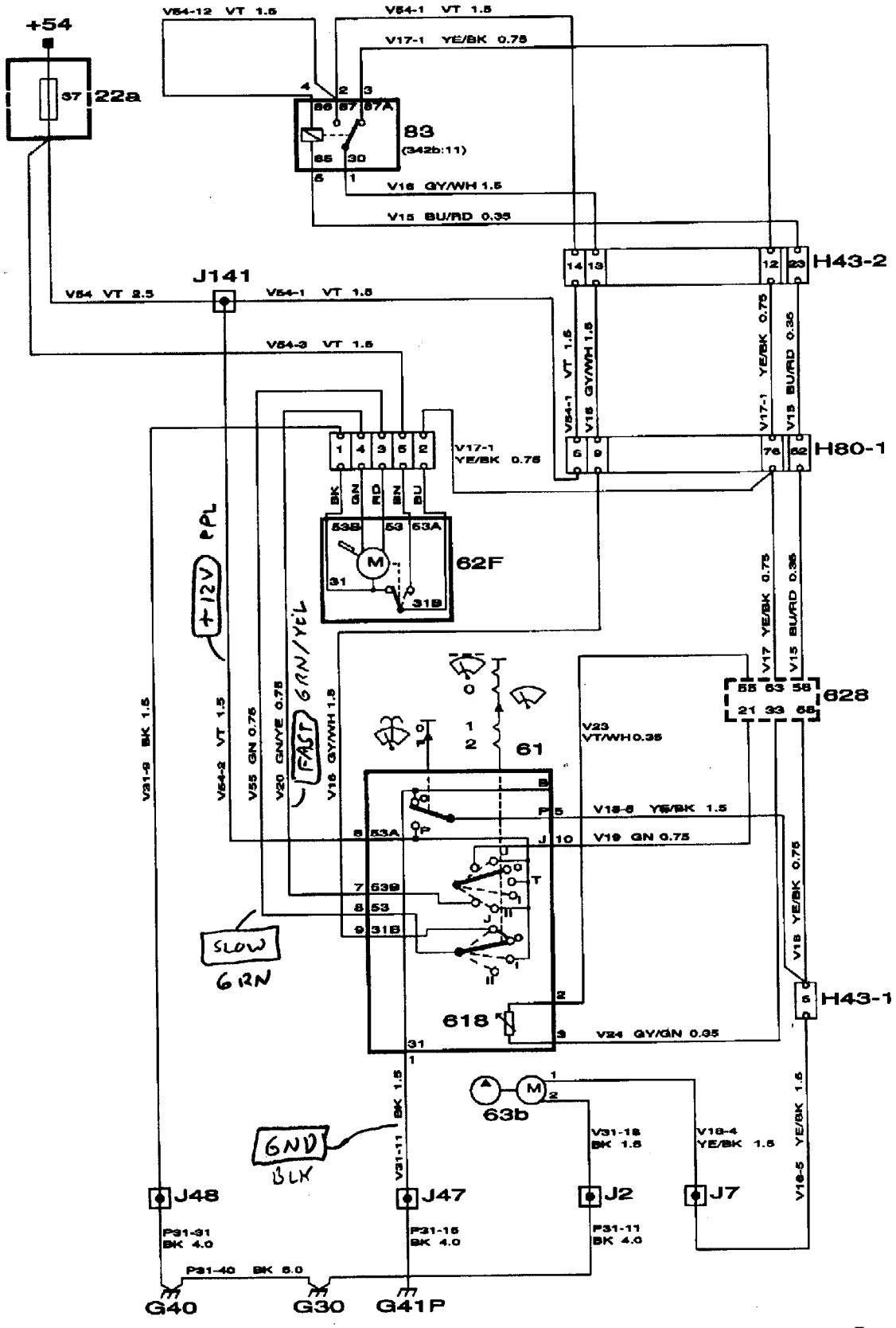

HOT-SIDE SWITCHING

Rain Tracker™
VEHICLE INTERFACE WIRING DIAGRAM

© 2003 OPTO-ELECTRONIC DESIGN, INC